Part No.

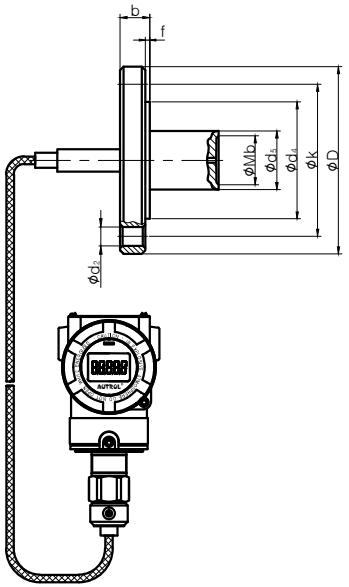

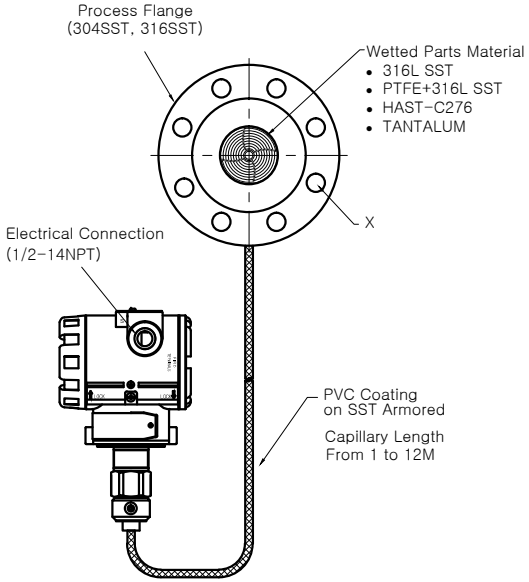

MODEL CODE

1. Model : APT3200LES
2. Flange Size & Material
   ☐ 2inch(50A) ☐ 3inch(80A) ☐ 4inch(100A) ☐Others _____
   ☐ 316L SST ☐ 304 SST
3. Flange Rating
   ☐ ANSI 150# ☐ANSI 300# ☐JIS 10K ☐JIS 20K
   ☐ DIN PN10/16 ☐DIN PN 25/40 ☐RF ☐FF ☐RJT
   ☐ Others _____
4. Extension Length(mm)
   ☐ 50 ☐ 100 ☐150 ☐ Others _____
5. Diaphragm Material
   ☐ 316L SST ☐PTFE+316L SST ☐Hast-C ☐ Tantalum ☐ Others _____
6. Fill Fluid
   ☐ Silicone 200 ☐ Silicone 704 ☐Others _____
7. Capillary Length(m) : _____
8. Electric Conn.
   ☐ 1/2NPT(F) ☐ G1/2(F) ☐ Others _____
9. Hazadous Location Certificate
   ☐ Ex d ☐ Ex ia ☐IP67 ☐IP66 ☐Others _____
10. Option
   ☐ LCD Indicator(5-Digit) ☐ Oil Free
   ☐ Lightning Protector(Internal) ☐ Bracket BA
   ☐ Bracket BF ☐ Others _____

Flange Size : 80mm (3 inch)

(Unit : mm)

Flange Rating	Mb	D	b	d2	k	f	d4	d5	X
ANSI Class150	72	190	24	19	152.5	1.5	127	76	4
ANSI Class300		210	29	22	168.5				8
JIS 10K	72	185	18	19	150	2	127	76	8
JIS 20K		200	22	23	160				
DIN PN 10/16	72	200	20	18	160	3	138	76	8
DIN PN 25/40			24	22					

Flange Size : 50mm (2 inch)

(Unit : mm)

Flange Rating	Mb	D	b	d2	k	f	d4	d5	X
ANSI Class150	40	152	19	19	120.5	1.5	92	48	4
ANSI Class300		165	22		127				8
JIS 10K	40	155	16	19	120	2	96	48	4
JIS 20K			18						8
DIN PN 10/16	40	165	20	18	125	3	102	48	4
DIN PN 25/40									

Flange Size : 100mm (4 inch)

(Unit : mm)

Flange Rating	Mb	D	b	d2	k	f	d4	d5	X
ANSI Class150	89	229	24	19	190	1.5	157	96	8
ANSI Class300		254	32	22	200				
JIS 10K	89	210	18	19	175	2	157	96	8
JIS 20K		225	24	23	185				
DIN PN 10/16	89	220	20	18	180	3	157	96	8
DIN PN 25/40		235	24	22	190				

Rev.	Description	Dwg.	Date	Chk'd	Date	App'd	Date

GENERAL TOLERANCE

RANGE	0.5-6	7-30	31-120
TOL.	±0.1	±0.2	±0.3
RANGE	121-315	316-1000	1001-2000
TOL.	±0.5	±0.8	± 1

AUTROL® DUON System Co.,Ltd.

TITLE APT3200 LES
Outline Dimension

Size	Scale	Unit	DWG No.	Rev.
A3	NS	mm	MD-ASS-3200-LES	0

Elec. Class	–	Safety Class	–	Sei. Cat.	–	Sheet	1 of 1